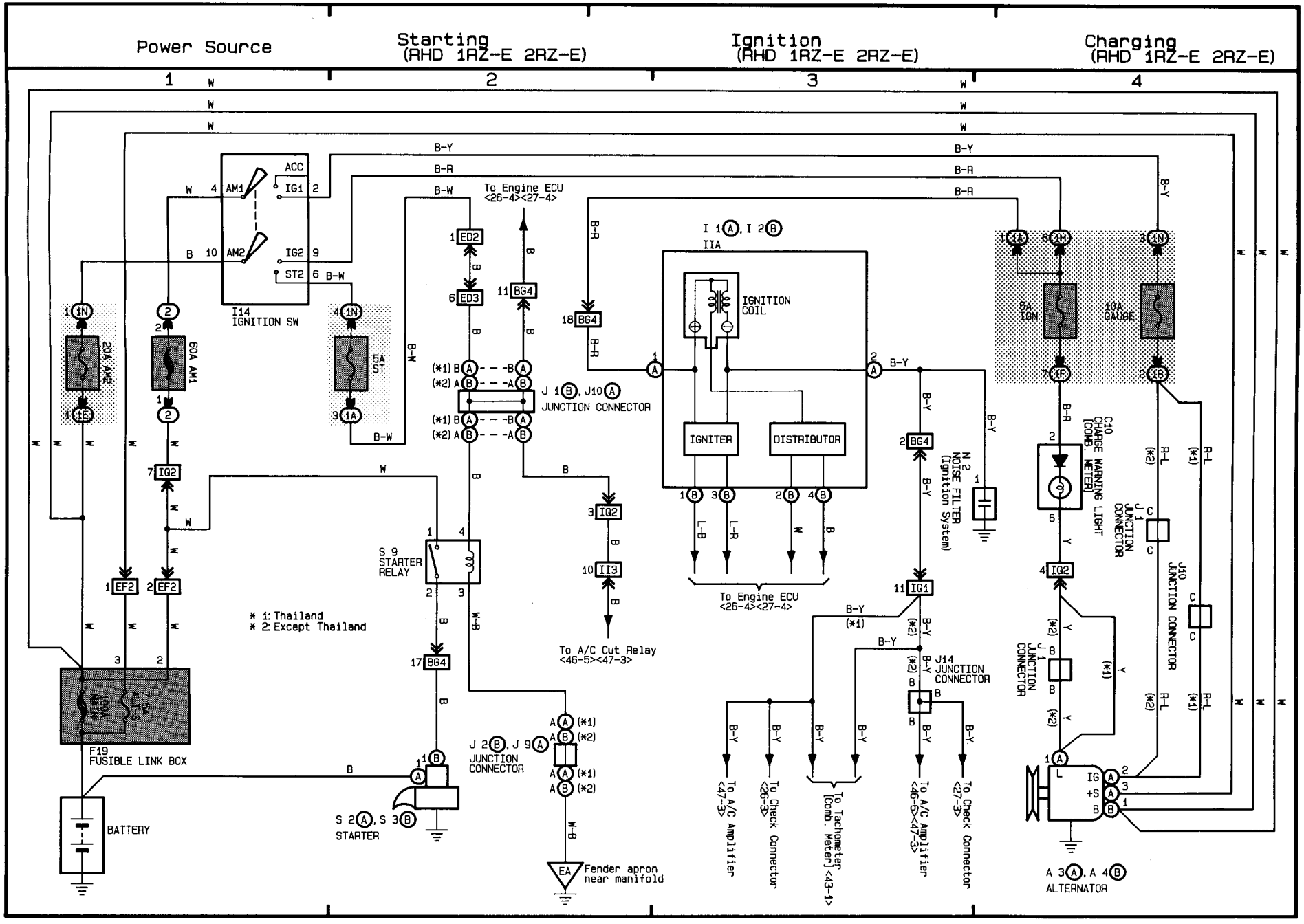
Power Source
Starting (RHD 1RZ-E 2RZ-E)
Ignition (RHD 1RZ-E 2RZ-E)
Charging (RHD 1RZ-E 2RZ-E)
1
2
3
4
I14 IGNITION SW
ACC
IG1
IG2
ST2
AM1
AM2
20A AM2
60A AM1
5A ST
To Engine ECU <26-4><27-4>
J 1 (B), J10 (A) JUNCTION CONNECTOR
I 1 (A), I 2 (B)
IIA
IGNITION COIL
IGNITER
DISTRIBUTOR
N 2 NOISE FILTER (Ignition System)
5A IGN
10A GAUGE
C10 CHARGE WARNING LIGHT [COMB. METER]
J 1 JUNCTION CONNECTOR
J10 JUNCTION CONNECTOR
S 9 STARTER RELAY
To A/C Cut Relay <46-5><47-3>
* 1: Thailand
* 2: Except Thailand
F19 FUSIBLE LINK BOX
BATTERY
S 2 (A), S 3 (B) STARTER
J 2 (B), J 9 (A) JUNCTION CONNECTOR
Fender apron near manifold
J14 JUNCTION CONNECTOR
To A/C Amplifier <47-3>
To Check Connector <26-3>
To Tachometer [Comb. Meter] <43-1>
To A/C Amplifier <46-6><47-3>
To Check Connector <27-3>
A 3 (A), A 4 (B) ALTERNATOR